DENLAR
FIRE PROTECTION
PRE-ENGINEERED RANGE HOODS
THE ORIGINAL

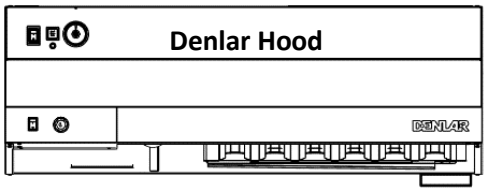

D1000 MODELS TECHNICAL DATASHEET

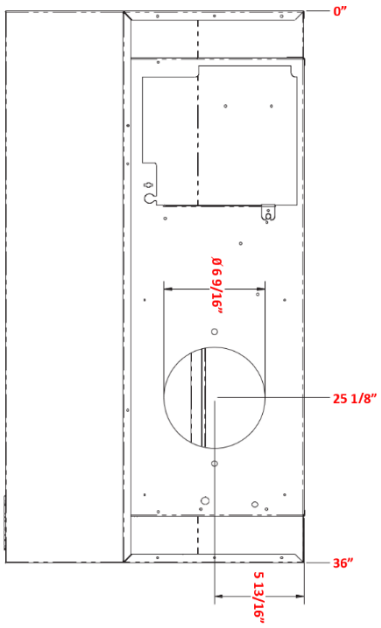

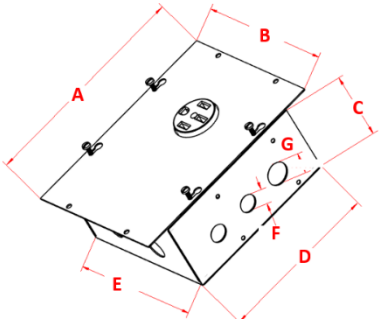

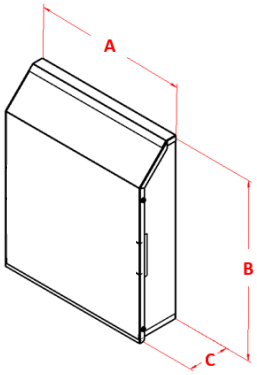

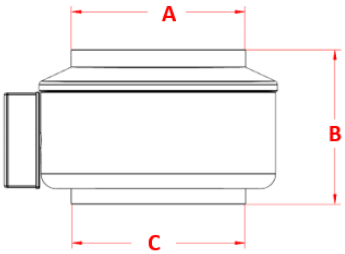

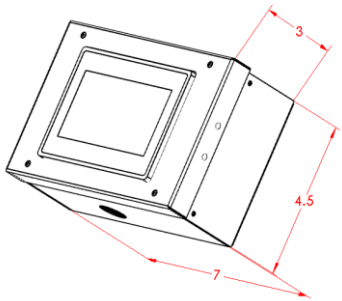

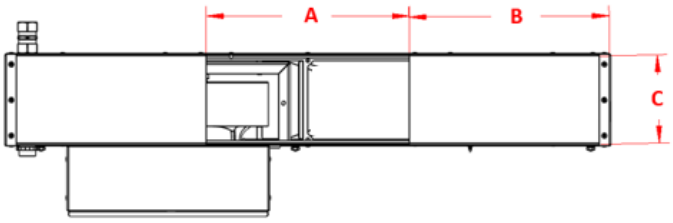

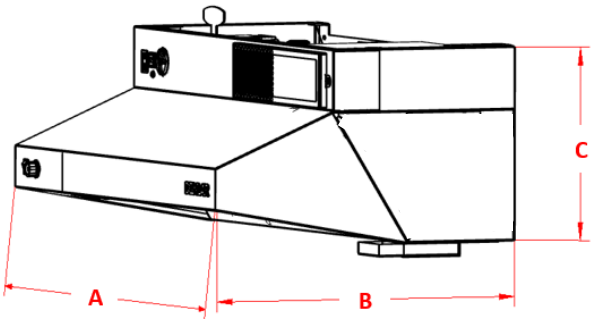

10 Denlar Dr. Chester, CT 06412

Table of Contents

Title	Page
Model Identification	3
D1000 Dimensions and Weights	4
D1000 Nozzle Placement	5
Electrical Specifications	6
Fan Specifications	7
Fan Dimensions	8
Standard / NFPA Rear and Top Ducted Locations	9
Front / Rear Exhaust Layout	10
Top Ducted Exhaust Layout	11
Back Plate Support Layout	12
D1000-Tank Information	13
MPK Data	14
Clock Box Specifications and Dimensions	15
Alarm Information	16
Accessory List	17

Model Identification

Model Identification

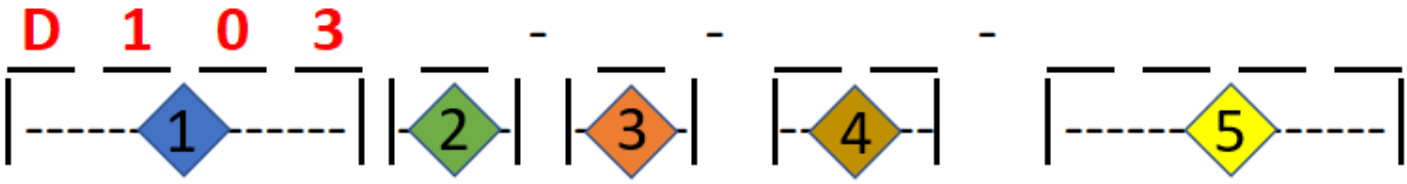

ID	1
Label	**Model**
D103	Denlar

ID	2
Label	**Size**
0	30" Model
6	36" Model

ID	3
Label	**Exhaust Type**
F	Front Exhaust
R	Rear Exhaust
D	Top Ducted Exhaust

ID	4
Label	**Top Ducted Fan Type**
IF	Inline Fan
RF	Roof Fan
WF	Wall Mount Fan

ID	5
Label	**NFPA Compliant**
NFPA	Includes High Performance Fan, Manual Pull Station, Timer Lock Out System

D1000 Dimensions and Weights

Model Dimensions and Weight						
MODEL	MOUNTING CONFIG.	MOUNTING HIEGHT (In.)	LENGTH (In.)(A)	DEPTH (In.)(B)	HEIGHT (In.)(C)	WEIGHT (Lbs.)
D1030-F (Standard)	WALL	MIN:24 MAX:30	30	19.38	10.5	53.4
D1030-F-NFPA					14.8	75
D1030-R (Standard)					10.5	53.4
D1030-R-NFPA					14.8	75
D1030-D-IF (Standard)					10.5	53.4
D1030-D-IF-NFPA						
D1030-D-RF (Standard)						
D1030-D-RF-NFPA						
D1030-D-WF (Standard)						
D1030-D-WF-NFPA						
D1036-F (Standard)		MIN:30 MAX:36	36		10.5	56.8
D1036-F-NFPA					14.8	78.8
D1036-R (Standard)					10.5	56.8
D1036-R-NFPA					14.8	78.8
D1036-D-IF (Standard)					10.5	56.8
D1036-D-IF-NFPA						
D1036-D-RF (Standard)						
D1036-D-RF-NFPA						
D1036-D-WF (Standard)						
D1036-D-WF-NFPA						

D103◆2__-F, D103◆2__-R, D103◆2__-D-◆4__ OR D103◆2__-D-◆4__ NFPA Main Unit Dimensions

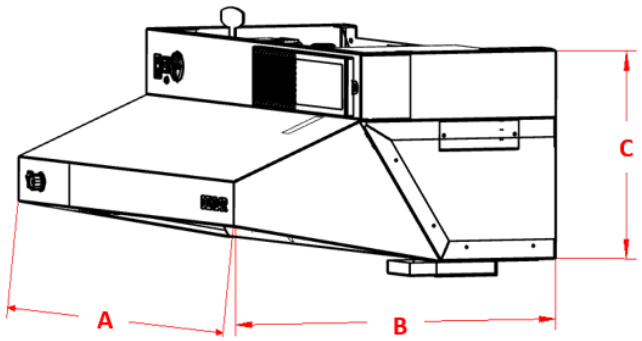

D103◆2__-F-NFPA AND D103◆2__-R-NFPA Main Unit Dimensions

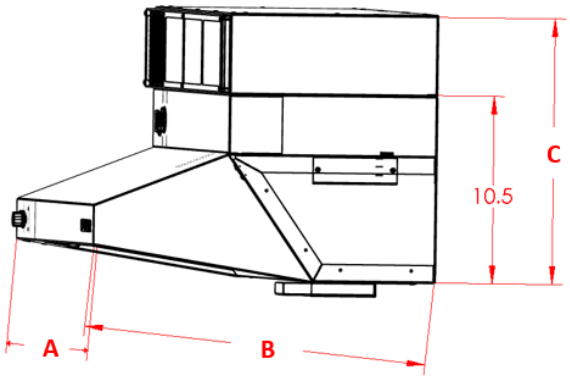

D1000 Nozzle Placement

D1030 Nozzle Placement (30” Model Hoods)

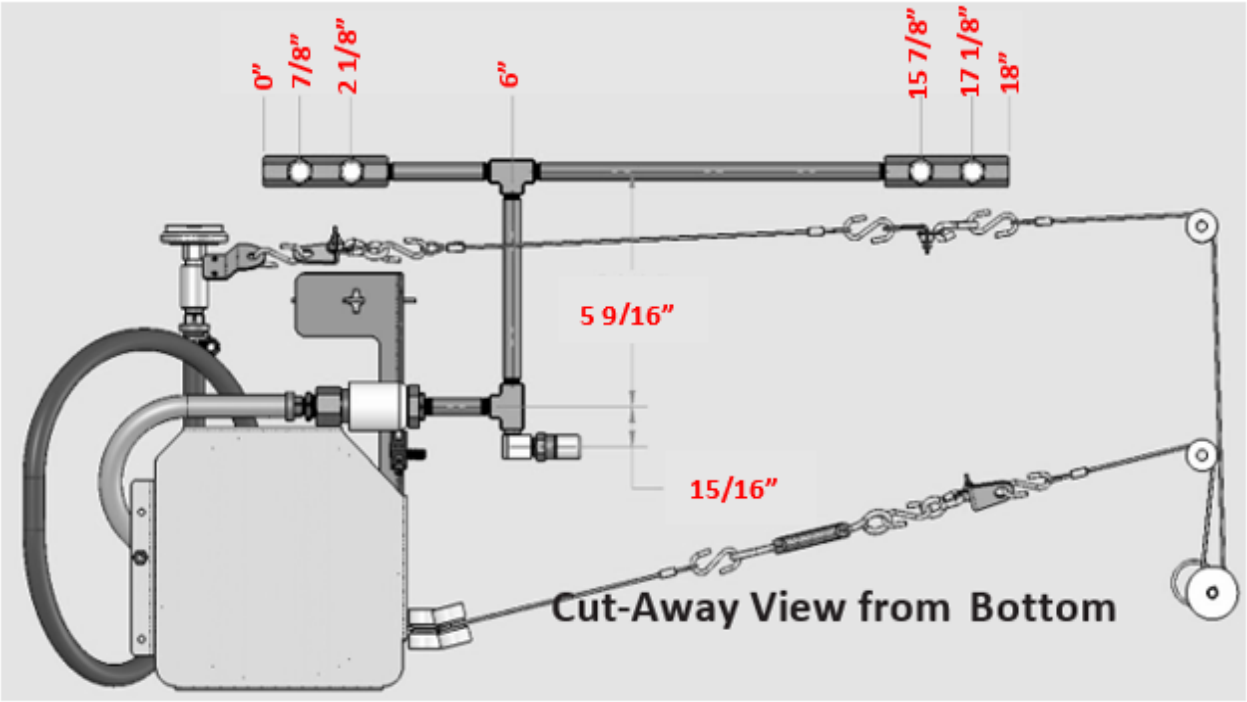

D1036 Nozzle Placement (36” Model Hoods)

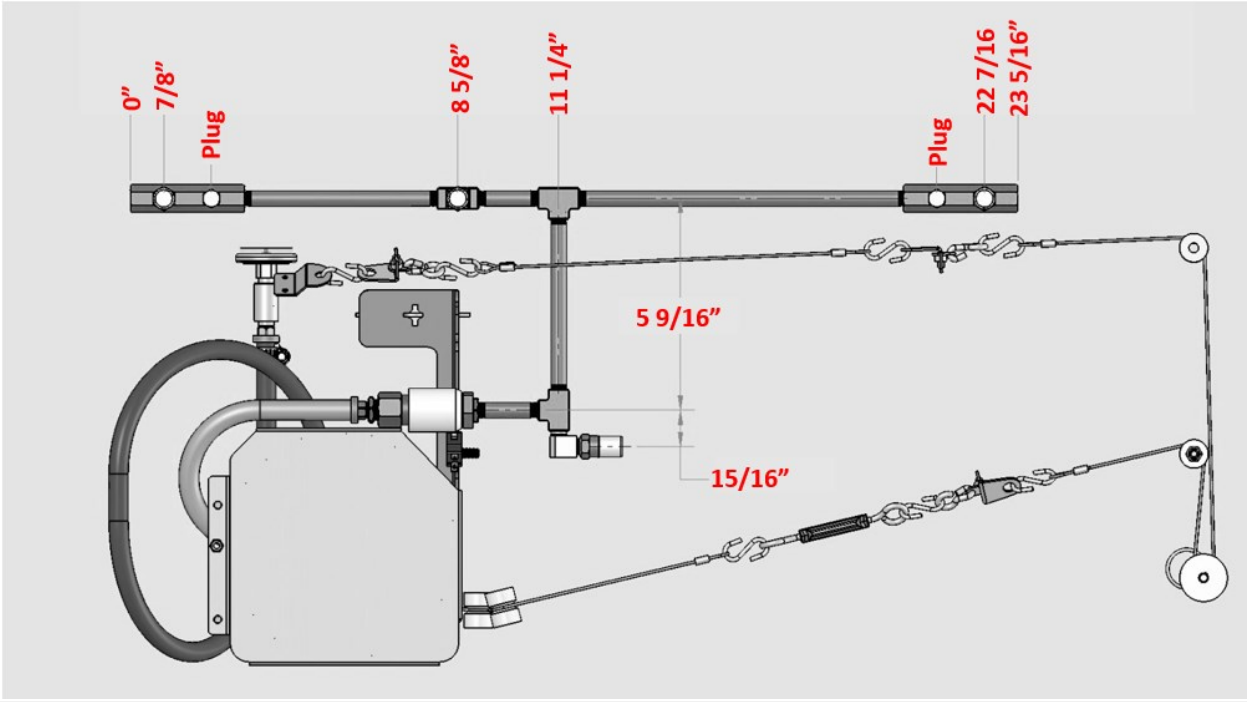

Electrical Specifications

Electrical Information									
MODEL	VOLATGE (AC)	PHASE	FREQUENCY (Hz.)	CIRCUIT BREAKER SIZE (AMPS)	OPERATING CURRENT (AMPS)	FAN OPERATING CURRENT (AMPS)	OUTPUT OPERATING CURRENT (AMPS)	INPUT WIRING	OUTPUT WIRING
D1030-F	120	1	60	15-20	1.38	0.8	0.25 to 0.5	12/2 MC WIRE	14/2 MC WIRE
D1030-F-NFPA					3.7	3.1			
D1030-R					1.38	0.8			
D1030-R-NFPA					3.7	3.1			
D1030-D-IF					2.4	1.8			
D1030-D-IF-NFPA					3.1	2.5			
D1030-D-RF					4.6	4			
D1030-D-RF-NFPA					5.6	5			
D1030-D-WF					1.38	0.8			
D1030-D-WF-NFPA					3.7	3.1			
D1036-F					1.38	0.8			
D1036-F-NFPA					3.7	3.1			
D1036-R					1.38	0.8			
D1036-R-NFPA					3.7	3.1			
D1036-D-IF					2.4	1.8			
D1036-D-IF-NFPA					3.1	2.5			
D1036-D-RF					4.6	4			
D1036-D-RF-NFPA					5.6	5			
D1036-D-WF					1.38	0.8			
D1036-D-WF-NFPA					3.7	3.1			

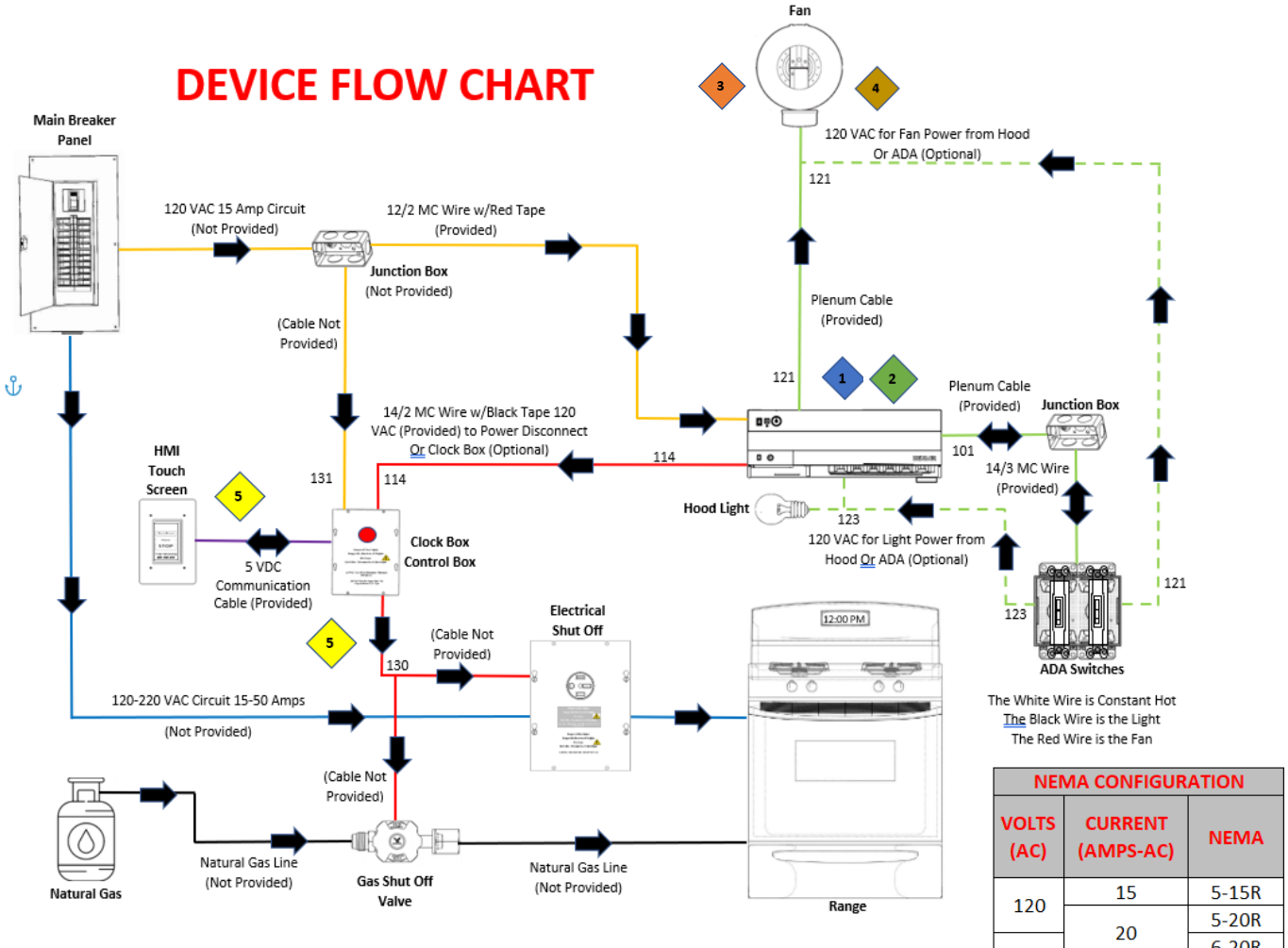

NEMA CONFIGURATION		
VOLTS (AC)	CURRENT (AMPS-AC)	NEMA
120	15	5-15R
	20	5-20R
		6-20R
220	50	10-50R
		14-50R

Fan Specifications

Fan Ratings																
MODEL	STYLE	TYPE	WEIGHT (Lbs.)	OPERATING CURRENT (AMPS)	VOLATGE (AC)	PHASE	FREQUENCY (Hz.)	CFM +-2.5% (LOW-HIGH)	PRESSURE (In. WATER)	DBA (LOW-HIGH)	HOOD OUTLET (In.)(LxH)	DUCT	FAN INLET	FAN OUTLET	CONTROL	SPEEDS
D1030-F	Front Discharge	Integral to Hood	6.25	0.8	120	1	60	174 ~ 276	-0.09 ~ -0.18	62 ~ 70	12 X 3	N/A	6.5 (Dia.)	12 X 3	Electronic Control Module (ECM)	Variable
D1030-F-NFPA			22	3.1				216 ~ 514	-0.26 ~ -1.38	60 ~ 84	30 x 4		9.8 x 9.7	30 x 4		
D1030-R	Rear Discharge		6.25	0.8				139 ~ 279	-0.09 ~ -0.17	62 ~ 70	12 X 3	4- 24 In.	6.5 (Dia.)	12 X 3		
D1030-R-NFPA			22	3.1				174 ~ 519	-0.25 ~ -1.35	60 ~ 80	10 X 4.25		9.8 x 9.7	10 X 4.25		
D1030-D-IF	Inline	Ducted	10.5	1.8				283 ~ 474	-0.23 ~ -0.61	57 ~ 69	7 (Dia)	35 ft.	10 (Dia.)	10 (Dia.)		
D1030-D-IF-NFPA			13.5	2.5				297 ~ 545	-0.29 ~ -0.89	60 ~ 70			12 (Dia.)	12 (Dia.)		
D1030-D-RF	Inline Ducted Roof Mount	Roof w/Curb adapter (Without physical curb)	35	4				357 ~ 499	-0.40 ~ -0.84	61 ~ 73		50 ft.	10 (Dia.)	20-13/16 (Dia.)		
D1030-D-RF-NFPA				5				326 ~ 548	-0.39 ~ -1.09	63 ~ 75			9 7/8	20 (Dia.)		
D1030-D-WF	Wall Mount	External Wall Ducted	13.5	0.8				208 ~ 281	-0.14 ~ -0.28	56 ~ 60		35 ft.	6.5 (Dia.)	14 x 3		
D1030-D-WF-NFPA			20.5	3.1				172 ~ 522	-0.10 ~ -0.66	60 ~ 75			8.5 (Dia.)	12 X 3		
D1036-F	Front Discharge	Integral to Hood	6.25	0.8				174 ~ 276	-0.09 ~ -0.18	62 ~ 70	12 X 3	N/A	6.5 (Dia.)	12 X 3		
D1036-F-NFPA			22	3.1				216 ~ 514	-0.26 ~ -1.38	60 ~ 84	30 x 4		9.8 x 9.7	30 x 4		
D1036-R	Rear Discharge		6.25	0.8				139 ~ 279	-0.09 ~ -0.17	62 ~ 70	12 X 3	4- 24 In.	6.5 (Dia.)	12 X 3		
D1036-R-NFPA			22	3.1				174 ~ 519	-0.25 ~ -1.35	60 ~ 80	10 X 4.25		9.8 x 9.7	10 X 4.25		
D1036-D-IF	Inline	Ducted	10.5	1.8				283 ~ 474	-0.23 ~ -0.61	57 ~ 69	7 (Dia)	35 ft.	10 (Dia.)	10 (Dia.)		
D1036-D-IF-NFPA			13.5	2.5				297 ~ 545	-0.29 ~ -0.89	60 ~ 70			12 (Dia.)	12 (Dia.)		
D1036-D-RF	Inline Ducted Roof Mount	Roof w/Curb adapter (Without physical curb)	35	4				357 ~ 499	-0.40 ~ -0.84	61 ~ 73		50 ft.	10 (Dia.)	20-13/16 (Dia.)		
D1036-D-RF-NFPA				5				326 ~ 548	-0.39 ~ -1.09	63 ~ 75			9 7/8	20 (Dia.)		
D1036-D-WF	Wall Mount	External Wall Ducted	13.5	0.8				208 ~ 281	-0.14 ~ -0.28	56 ~ 60		35 ft.	6.5 (Dia.)	14 x 3		
D1036-D-WF-NFPA			20.5	3.1				172 ~ 522	-0.10 ~ -0.66	60 ~ 75			8.5 (Dia.)	12 X 3		

Fan Dimensions

D103[2]-F and D103[2]-R Standard Exhaust Fan Dimensions

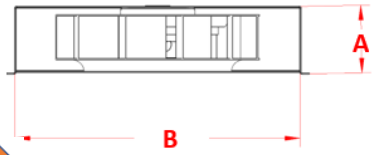

3

	A	B
30" Model	3	12
36" Model		

Measurements in Inches

D103[2]-D-IF and D103[2]-D-IF-NFPA Top Ducted Fan Dimensions

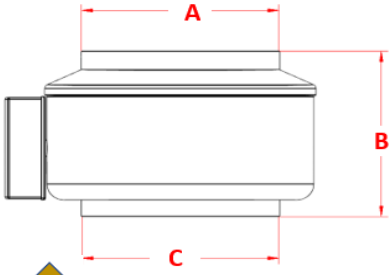

3 4

	A	B	C
Standard Inline	10	8.25	10
NFPA Inline	12	10.5	12

Measurements in Inches

D103[2]-F-NFPA and D103[2]-R-NFPA Exhaust Fan Dimensions

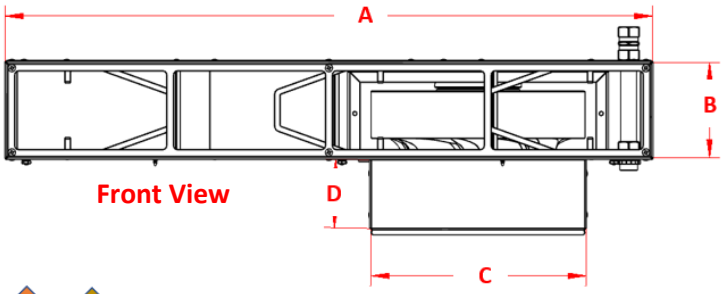

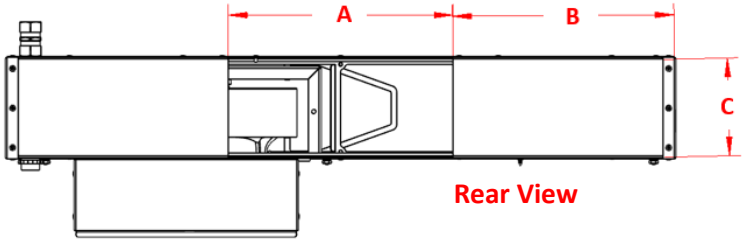

3 4

	A	B	C	D
30" Model	30	4.3	10	3
36" Model	36			

Measurements in Inches

	A	B	C
30" Model	10	10	4.3
36" Model		13	

Measurements in Inches

D103[2]-D-WF and D103[2]-D-WF-NFPA Top Ducted Wall Mount Fan Dimensions

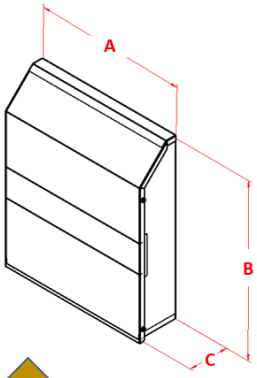

3 4

	A	B	C
Standard Wall Mount	14.6	17	4
NFPA Wall Mount	13.2		4.4

Measurements in Inches

D103[2]-D-RF D103[2]-D-RF-NFPA Top Ducted Roof Mount Fan Dimensions

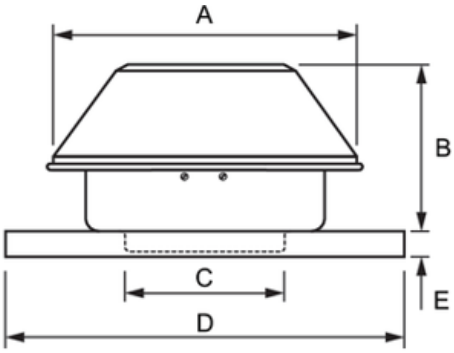

3 4

	A	B	C	D	E
Standard Roof Mount	20.8	11.5	10	20	1.5
NFPA Roof Mount	20	12.5	9.8		

Measurements in Inches

Standard / NFPA Rear and Top Ducted Locations

D103[2]-R Exhaust Cutout Location

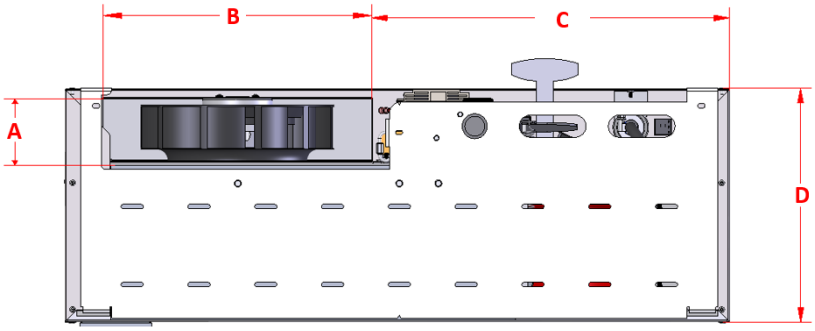

	A	B	C	D
30" Model	3	12	16	10.5
36" Model			19	

Measurements in Inches

D103[2]-R-NFPA Exhaust Cutout Location

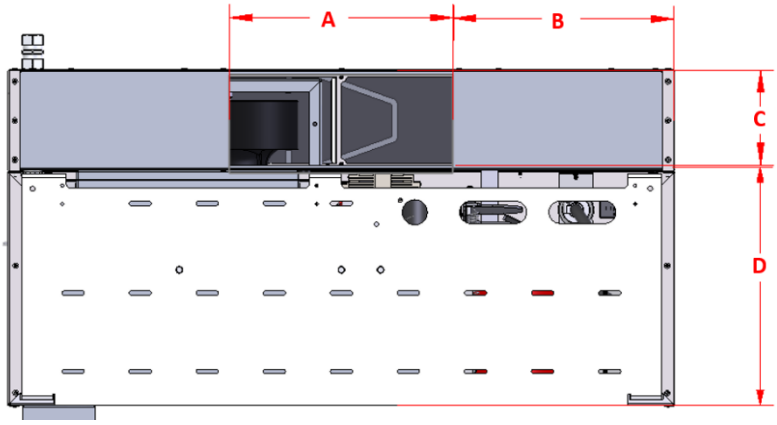

	A	B	C	D
30" Model	10	10	4.3	10.5
36" Model		13		

Measurements in Inches

D1030-D-[4] and D1030-D-[4]-NFPA Models Top Ducted Exhaust Cutout Location

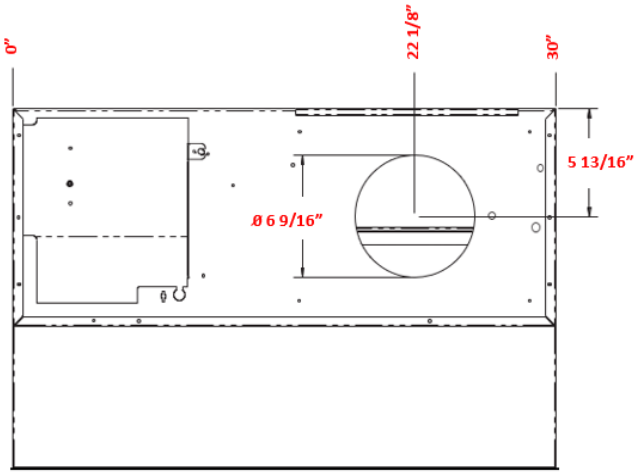

D1036-D-[4] and D1036-D-[4]-NFPA Models Top Ducted Exhaust Cutout Location

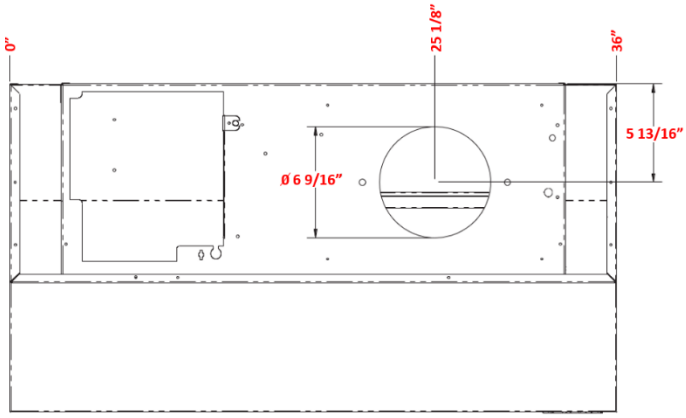

Front / Rear Exhaust Layout

D103_-F Exhaust Layout

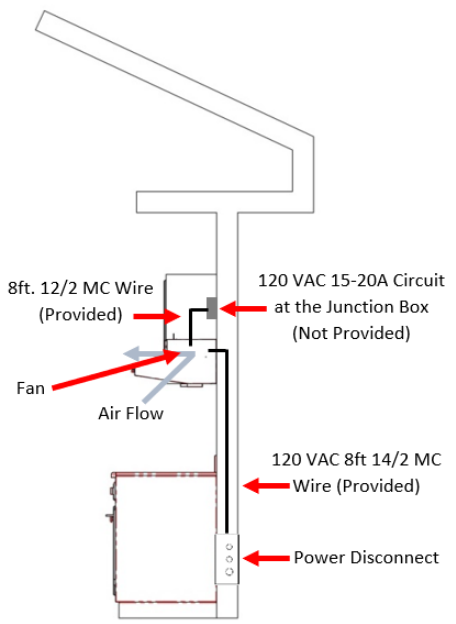

D103_-F-NFPA Exhaust Layout

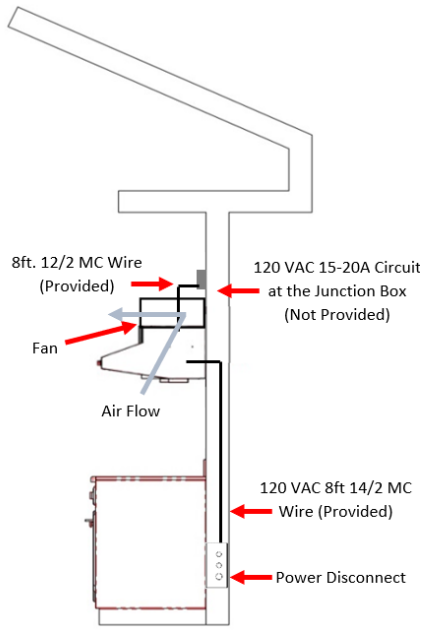

The Main Unit needs clearance to tilt to a 45 Degree Angle for Maintenance Purposes

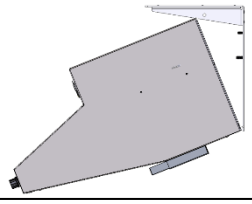

D103_-R Exhaust Layout

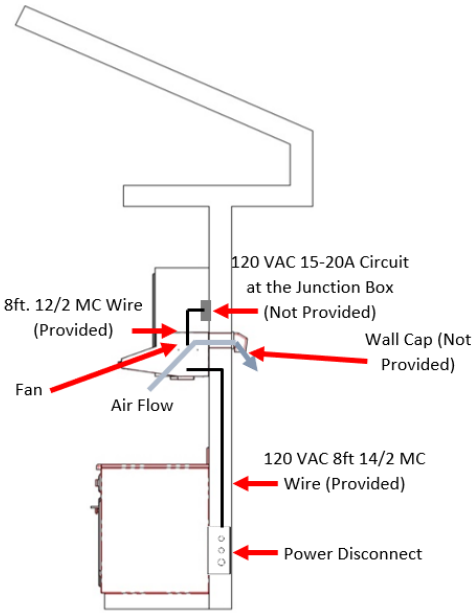

D103_-R-NFPA Exhaust Layout

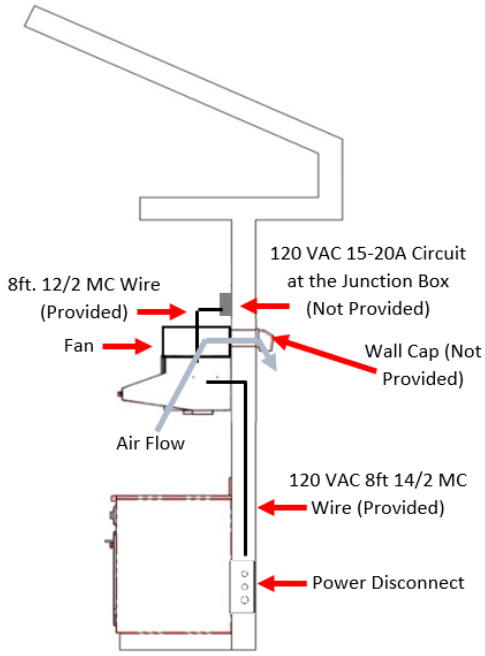

Top Ducted Exhaust Layout

D103◆2__-D-IF AND D103◆2__-D-IF-NFPA Inline Layout

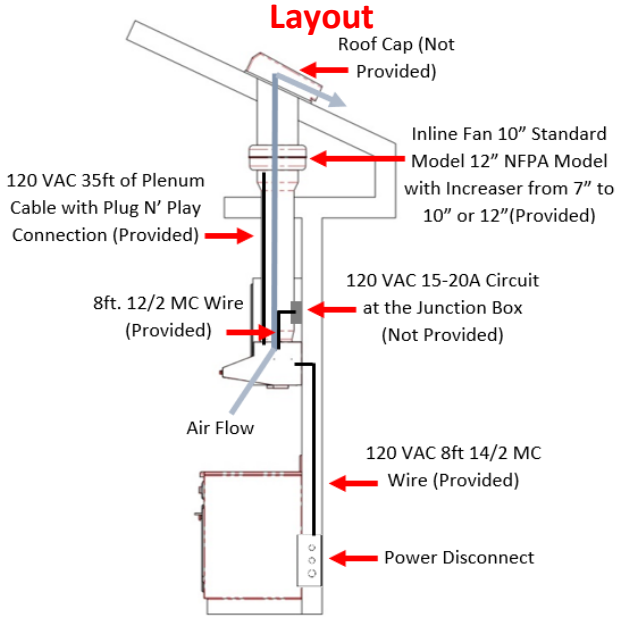

D103◆2__-D-WF AND D103◆2__-D-WF-NFPA Wall Mount Layout

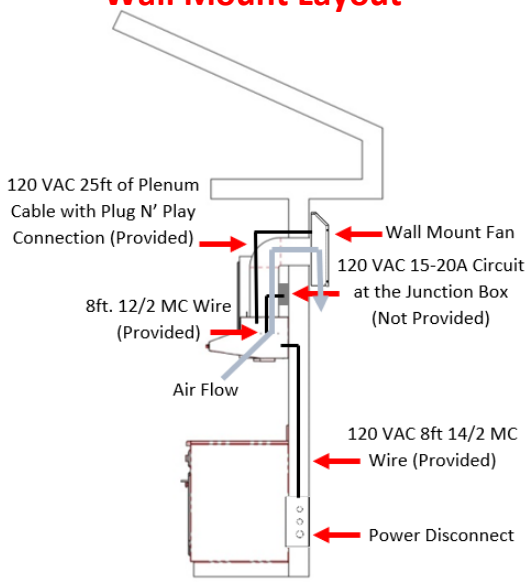

The Main Unit needs clearance to tilt to a 45 Degree Angle for Maintenance Purposes

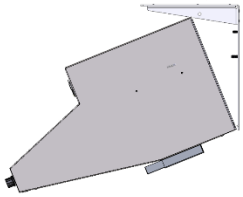

D103◆2__-D-RF AND D103◆2__-D-RF-NFPA Roof Mount Layout

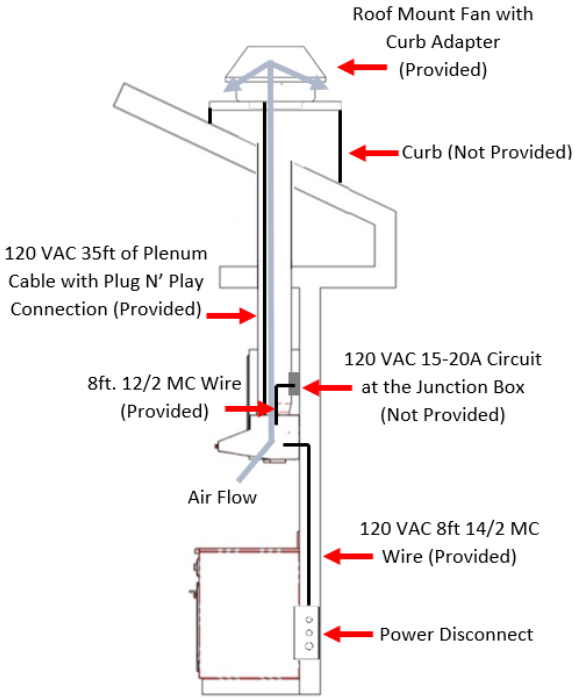

Back Plate Support (BPS) Layout

Back Plate for D103◆2◆-F and D103◆2◆-R Exhaust Models

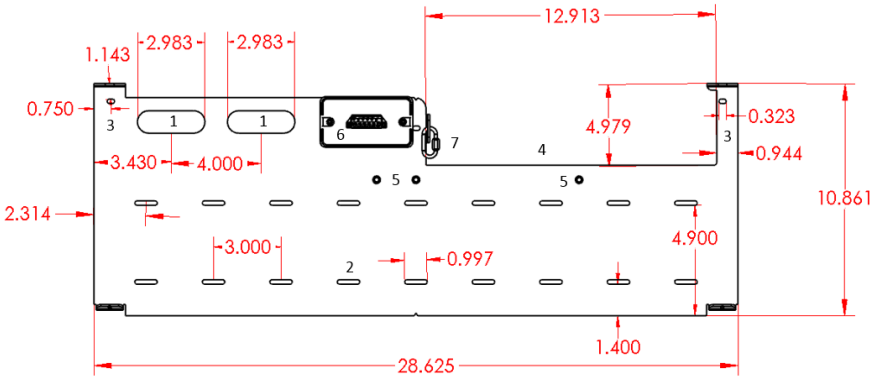

Back Plate Support Layout	
1	Cut-outs for Wire Entry
2	Mounting Holes
3	Top Mounting Holes
4	Cut-out for Rear Exhaust Fan
5	1/4-20 Studs for Securing Hood to D1000-BPS
6	Handy Box for Power In and Power Out
7	Quick Link Safety Cable Holder

Back Plate for D103◆2◆-F-NFPA and D103◆2◆-R-NFPA Exhaust Models

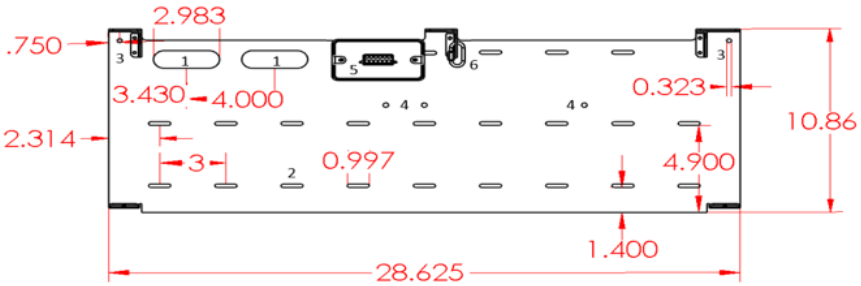

Back Plate Support Layout	
1	Cut-outs for Wire Entry
2	Mounting Holes
3	Top Mounting Holes
4	1/4-20 Studs for Securing Hood to D1000-BPS
5	Handy Box for Power In and Power Out
6	Quick Link Safety Cable Holder

Back Plate for D103◆2◆-D-◆4◆ and D103◆2◆-D-◆4◆-NFPA Top Ducted Models

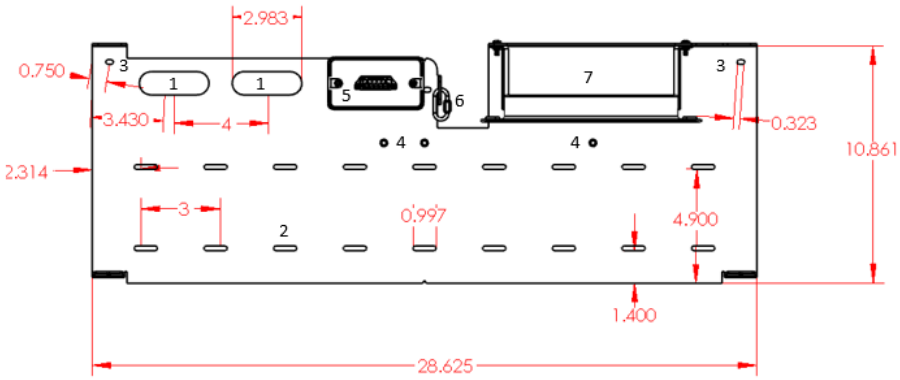

Back Plate Support Layout	
1	Cut-outs for Wire Entry
2	Mounting Holes
3	Top Mounting Holes
4	1/4-20 Studs for Securing Hood to D1000-BPS
5	Handy Box for Power In and Power Out
6	Quick Link Safety Cable Holder
7	Collar to Attach Duct Work (7" Dia. X 1" Height) ***(A Minimum 6" length of 7"Dia. Duct is required before connecting an Increaser/Adapter)***

D1000-Tank Information

(Integral to all D1000 Hood Models)

	Tank Information											
	TYPE	COMPLIANCE	MOUNTING CONFIGURATION	LENGTH (In.)	DEPTH (In.)	HEIGHT (In.)	WEIGHT (Lbs.)	VESSEL	CHEMICAL TYPE	VOLUME (mL.)	CHEMICAL WEIGHT (Lbs.)	PRESSURE (PSI)+-8%
D1000-TANK-FC	Self Contained Fire Suppresion System	UL-1995	Integral to the Hood	N/A	6	8	9.4	Stainless Steel	Amerex 660	1300	2.2	102

D1000-TANK-FC ASY-200139

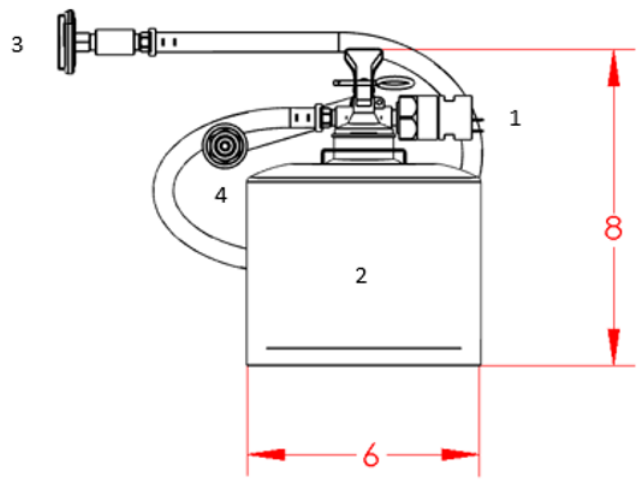

NOTES:	
1	Tank is Equipped with a Pressure Switch which opens on discharge
2	Tank is of Stainless Steel Construction
3	Visual Pressure Gauge
4	Discharge Hose with Quick Connect fitting attached

Tank Location

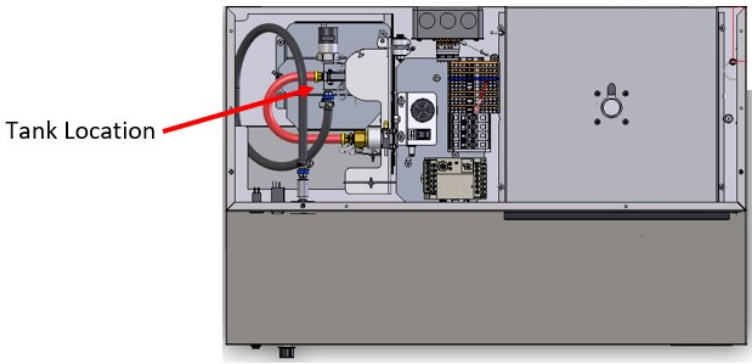

D1000-MPK Data

(Part of NFPA Models)

The Manual Pull Station (D1000-MPK) is designed to discharge the D1000 Model when a user pulls the tab from the Manual Pull Station Face Plate. The D1000-MPK is provided with 25 feet Stainless-steel Cable and with three 90 Degree Corner Pulleys. It is required to have 7-10 inches extra of the Stainless-steel Cable at the Pull Station Box.

The D1000-MPK comes equipped with the following:

- 1x Enclosure 4” x 1.5” Octagon Metal Box
- 1x Manual Pull Station Face Plate
- 1x 1/2” ENT Conduit Connector
- 3x 90 Degree Corner Pulleys
- 1x 25’ Stainless-steel Cable with Clevis Pin

1x Enclosure 4” x 1.5” Octagon Metal Box

1x Manual Pull station Face Plate

1x 1/2” ENT Conduit Connector

3x 90’ Degree Corner Pulleys

D1000 MPK-Pull Pin Location

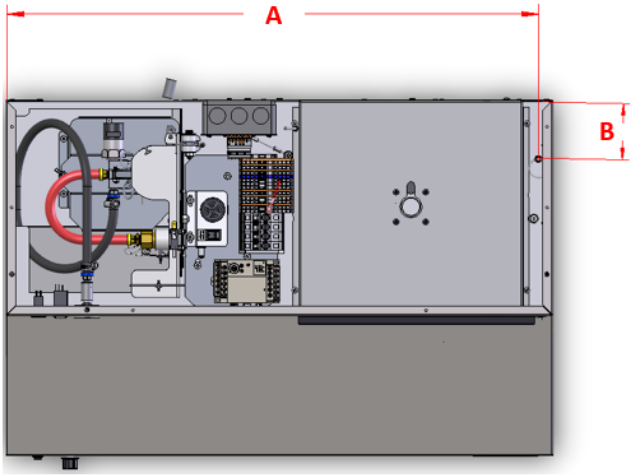

	A	B
30" Model	29.175	3
36" Model	32.175	

Measurements in Inches

Clock Box Specifications and Dimensions

(Part of NFPA Models)

	CLOCKBOX INFORMATION							
	MOUNTING	WEIGHT (Lbs.)	VOLATGE (AC)	PHASE	FREQUENCY (Hz.)	BREAKE SIZE (AMPS)	OPERATING CURRENT (AMPS)	Touch Screen Voltage (DC)
Clockbox Standard	Surface Mount or Flush	14	120	1	60	15	0.1	5
Clockbox Pro		18						24

	CLOCKBOX FEATURES										
	TWO HOUR TIMER	PASSWORD PROTECTED	ADJUSTABLE TIMER	CHANGE PASSWORD	ADA COMPATIBLE	LANGUAGE SELECTION	INPUT / OUTPUT TO A MONITORING STATION / ALARM SYSTEM	INTERACTS WITH THE HOOD	DISPLAYS USER INSTRUCTIONS	DISPLAYS HOOD FAULTS	LOCKS OUT IF THERE IS A FAULT WITH THE HOOD
Clockbox Standard	Y	Y	Y	Y	N	N	N	N	N	N	N
Clockbox Pro	Y	Y	Y	Y	Y	Y	Y	Y	Y	Y	Y

CLOCK BOX STANDARD DIMENSIONS

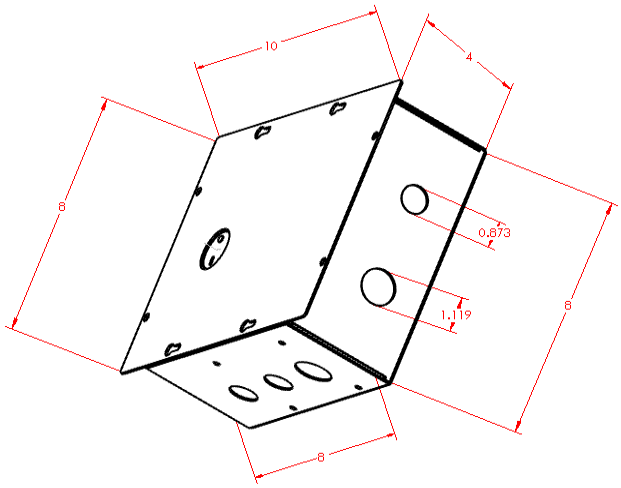

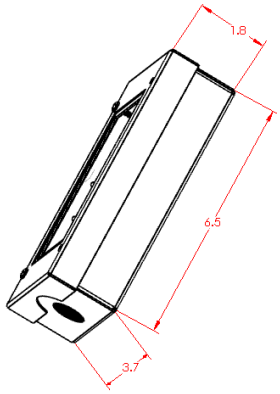

Surface Mount

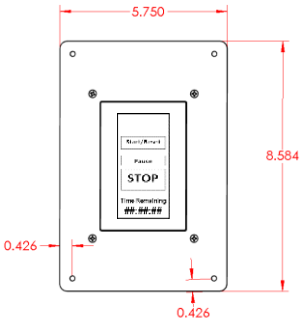

Flush Mount

CLOCK BOX PRO DIMENSIONS

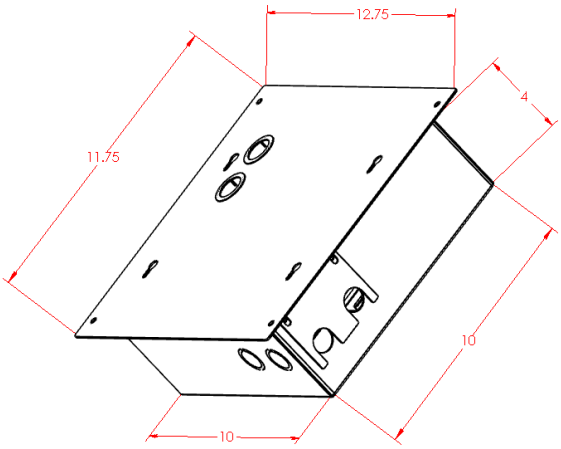

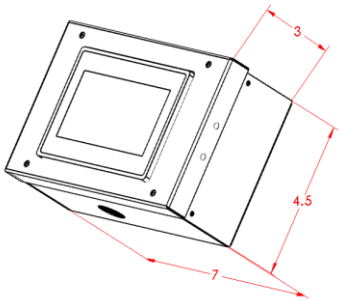

Surface Mount

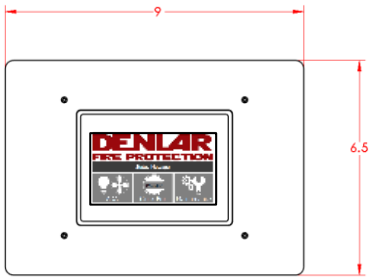

Flush Mount

Alarm Information

(Integral to all Models)

	Alarm Ratings					
	TYPE	TYPE OF CONTACTS	CONTACT AMPERAGE (AC)	DECIBLES	LOCATION	Activates Upon
Internal Buzzer	Audible	None	None	90	Top Center of the Main Unit	Tank Discharge Hose Disconnected, Low Pressure in the Tank, or High Temperature Fault (190'F Deg. At the Hood)
Maintenance Alarm	Dry Contact	Com / NO	5	None	PLC Contacts C0 and Y0	
Local Alarm					PLC Contacts C1 and Y1	Low Pressure in the Tank and High Temperature Fault (190'F Deg. At the Hood)
Micro-Switch	Dry Contacts	Com / NO / NC	15		Micro-Switch above Tank Actuation Paddle	Mechanical Discharge of the Tank

Alarm Location

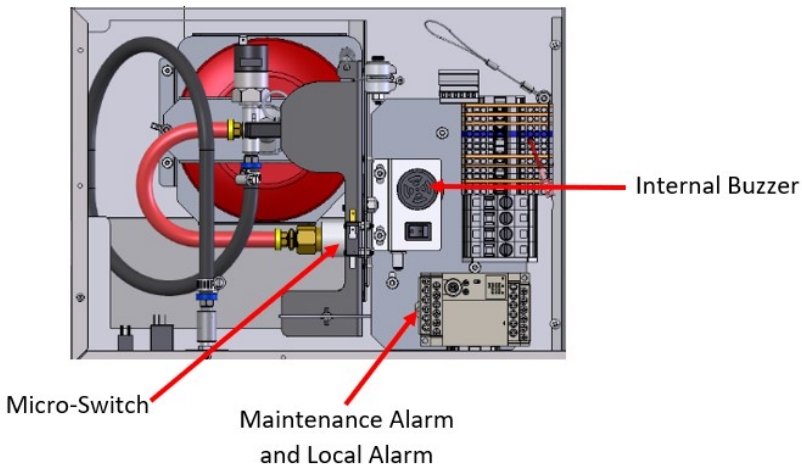

Micro-Switch Layout

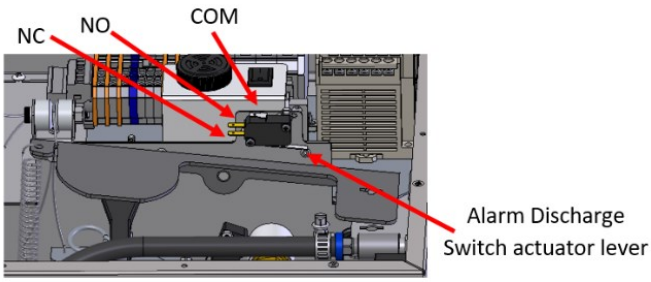

Accessory Table

Accessory	Description
D1000-E	Electrical Range Shutoff
D1000-G	Gas Range Shutoff
D1000-DED	Electrical and Gas Range Shutoff
D1000-DRD	Dual Receptacle Range Shutoff
Top Cover	Top Cover for Main Units
D1000-STROBE	Horn/Strobe that activates on discharge
D1000-LSC	Limits the Fans CFM on the high side
D1000-MACM	Powers on a Make-up Air Fan when either the Hoods Fan is powered on or there is power at the Range
D1000-ADA	Handicap Accesible Controls for the Hoods Fan and Light
D1000-MPK	Manual Pull Station
Clock Box	Two Hour Password Protected Lockout
Clock Box Pro	Two Hour Password Protected Lockout. Interacts with the Hood to display events. Connects to an Input/Output of a Building Monitoring System or Alarm Panel.
D1000-FBO	Allows the usage of a Fan provided by someone other the Denlar Fire Protection
D1000-CFCS	Allows multiple D1000 Models to connect to a common fan system
D1000-BPFC	A by-pass switch and relay system that allows one switch to turn on multiple D1000 Model fans
D1000-TANK-FC	A functional tank ready to install in to the D1000 Models
D1000-TANK-SA	A fire surpression media tank that is charged on location for shipping purposes
D1000-TANK-TEST	A nitrogen charged test tank with test links
D1000-TANK-E	An empty tank with no charge or media for shipping purposes